SNW112 SNW13V

Steel Flat loudspeakers

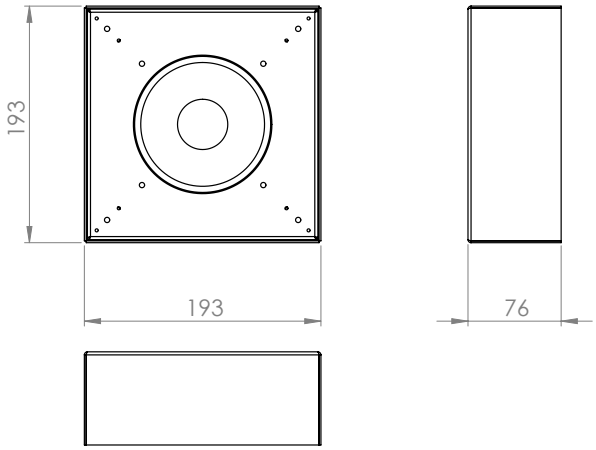

White Front cover

Code: **11AXX1**

Dimensions HxWxD (cm)	19,0 x 19,0 x 0,3
Weight (Kg)	0,19
Finishes	White fabric

Loudspeaker

Code (8 Ω): **SNW112**
Code (70V / 100V): **SNW13V**

Type	2 way coax
Components	Neodynium Tw, doped paper Wf
Power RMS / Max (8 Ω)	50 / 100
Power RMS W (70V / 100V)	50,0 - 37,5 - 25,0
Frequency response (Hz)	83 - 20k
Sensitivity dB (2,83V/1m)	89
Nom. impedance (Ω)	8
Woofer Ø (cm) **Tweeter voice coil** Ø (cm)	13,0 / 1,4
Dimensions HxWxD (cm)	19,0 x 19,0 x 5,8
Weight (Kg)	1,80 / 2,20

Steel Cabinet

CW195E		Cabinet with white primer ready for final coat
CW195B		**RAL 9016** Gloss White
CW195F		**RAL 9016** Matt white
CW195N		**RAL 9005** Gloss black
CW195H		**RAL 9005** Matt black
CW195Z		**Corten effect** (on request)
CW195C		Lacquered in all **RAL colours** (on request)
CW195S		**Satin stainless steel** (on request)

Dimensions HxWxD (cm)	19,4 x 19,4 x 7,6
Weight (Kg)	1,27

Fabric **Indoor Speaker** **Cabinet Steel**

70 / 100V Line Toroidal transformer G-Former™

Wiring
Cablaggio
Câblage
Verdrahtung

Connect to speaker *Connessione al diffusore* Connexion à l'enceinte *Verbindung zum Lautsprecher*		Connect to amplifier *Connessione all'amplificatore* Connexion à l'amplificateur *Verbindung zum Verstärker*	
0	Violet *Viola* Violet *Violett*	50 W	Brown *Marrone* Marron *Braun*
100 V	White *Bianco* Blanc *Weiß*	37,5 W	Red *Rosso* Rouge *Rot*
70 V	Green *Verde* Vert *Grün*	25 W	Blue *Blu* Bleu *Blau*
		Common *Comune* Câble commun *Gemeinsames Kabel*	Black *Nero* Noir *Schwarz*

Specifications

Nominal power (W) *Potenza nominale (W)* Puissance nominale (W) *Nennleistung (W)*	50
Input voltage (V) *Tensione d'ingresso (V)* Tension d'entrée (V) *Eingangsspannung (V)*	70 / 100
Frequency response (Hz) *Risp. in frequenza (Hz)* Rép. en fréquence (Hz) *Frequenzgang (Hz)*	40 - 21K
Output power on 8 Ω (W) *Potenza di uscita su 8 Ω (W)* Puissance de sortie sur 8 Ω (W) *Ausgangsleistung auf 8 Ω (W)*	50,0 37,5 25,0
Dimensions H x W x D (cm) *Dimensioni A x L x P (cm)* Dimensions H x L x P (cm) *Abmessungen H x B x D (cm)*	3,1 x 6,6 x 6,6
IP Code Grado di protezione IP Indice de protection IP Schutzart	43
Weight (Kg) *Peso (Kg)* Poids (Kg) *Gewicht (Kg)*	0,39